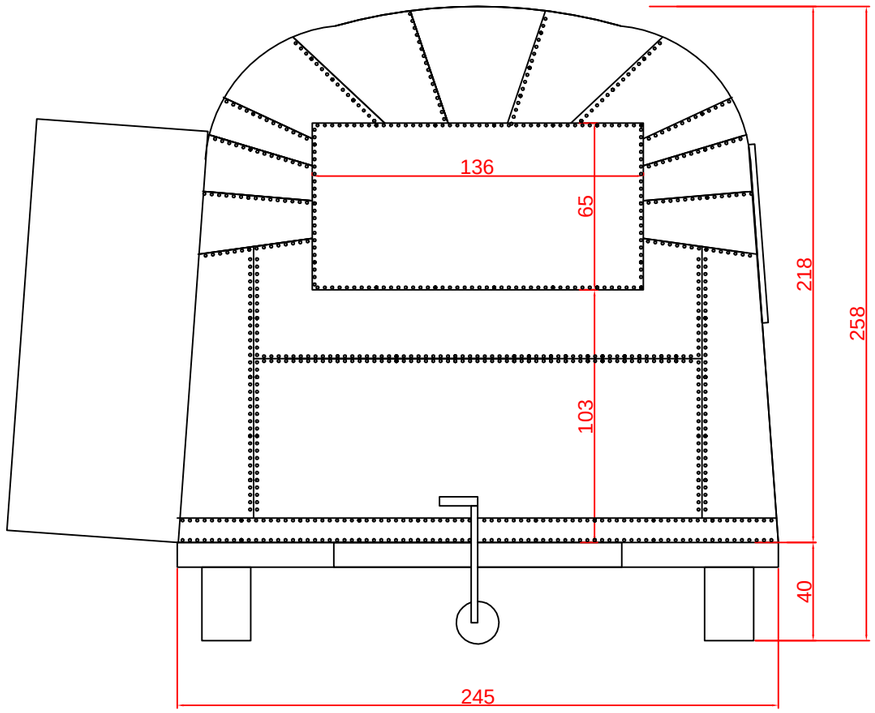

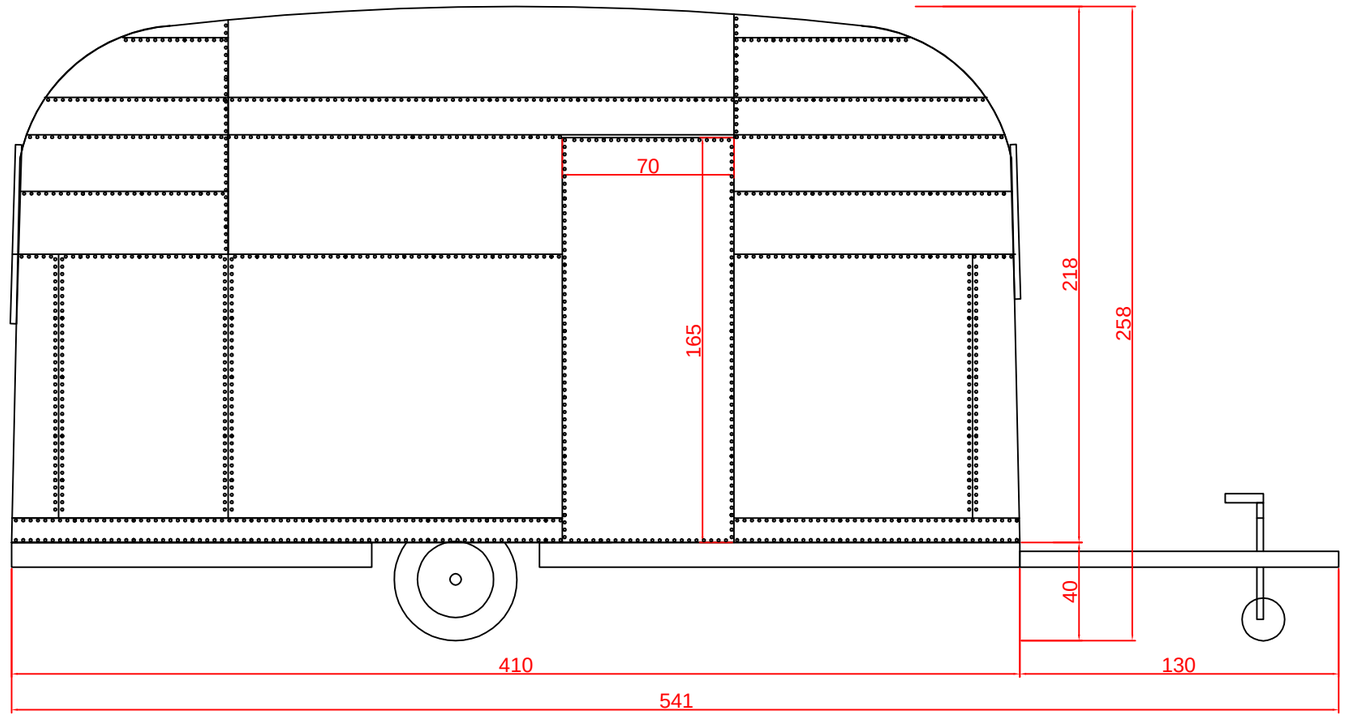

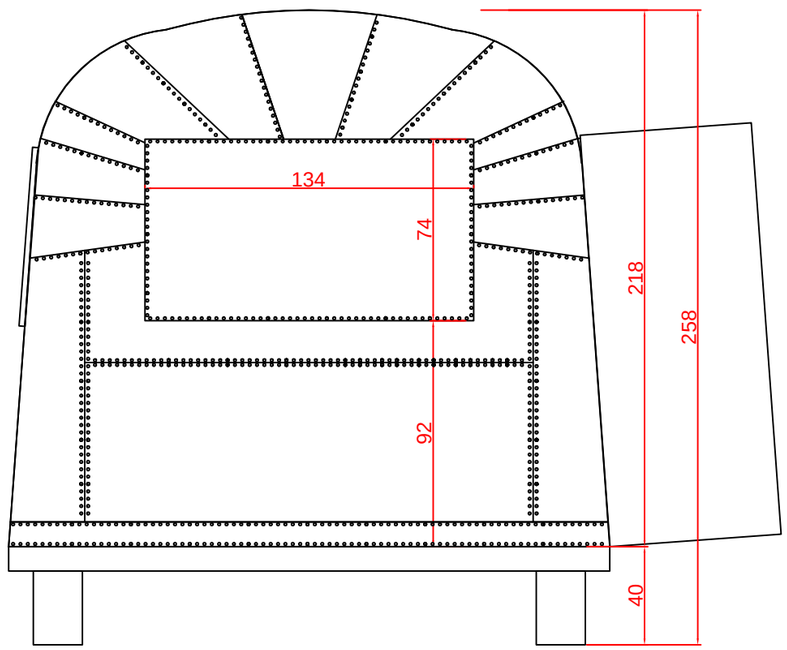

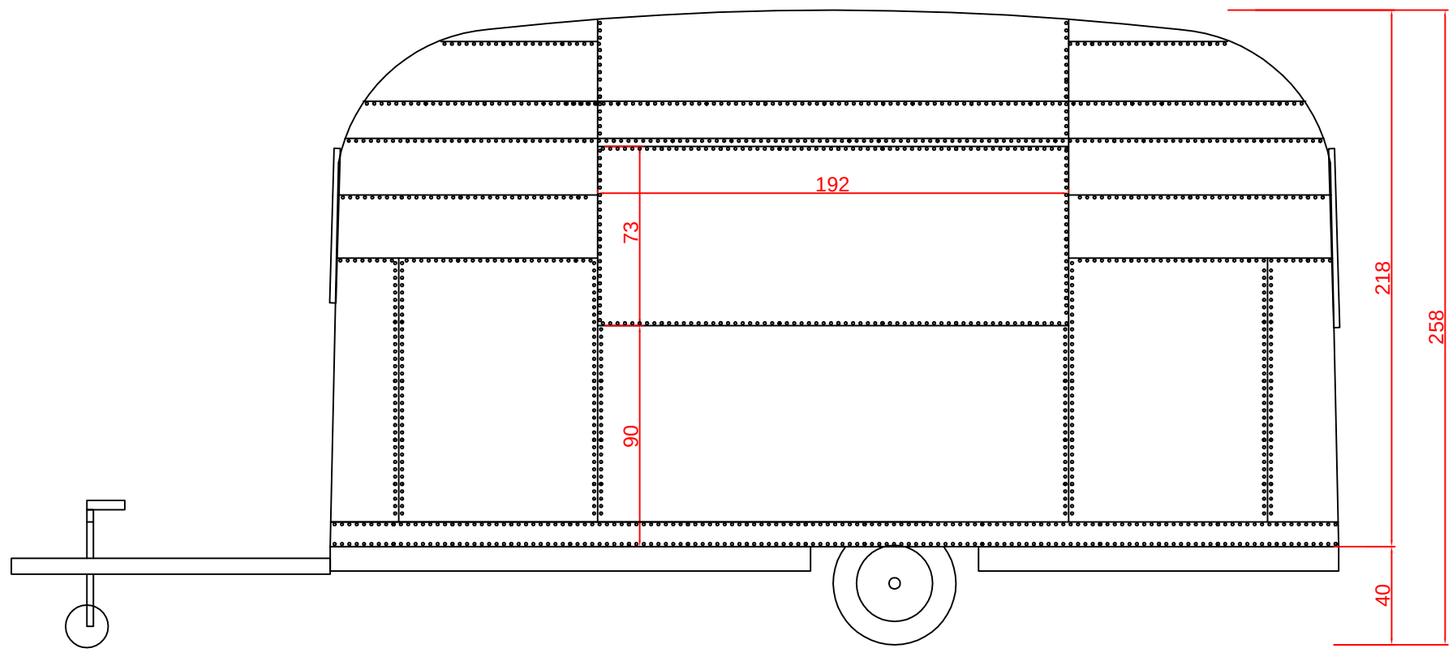

LABEL FOURGONNETTE
- FOOD TRUCK -